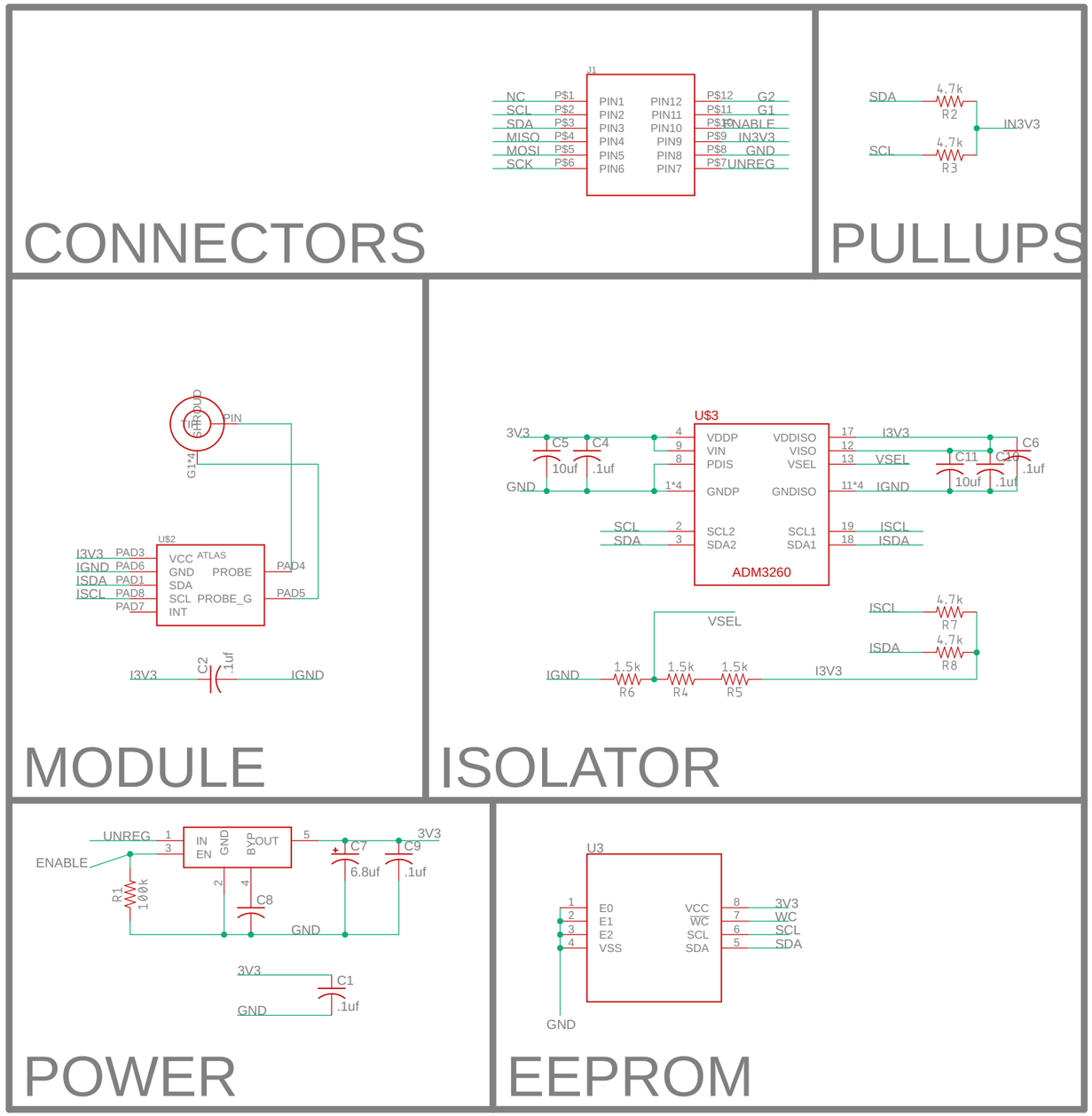
CONNECTORS
J1
NC P$1
SCL P$2
SDA P$3
MISO P$4
MOSI P$5
SCK P$6
PIN1 PIN2 PIN3 PIN4 PIN5 PIN6
PIN12 PIN11 PIN10 PIN9 PIN8 PIN7
P$12 G2
P$11 G1
P$10 ENABLE
P$9 IN3V3
P$8 GND
P$7 UNREG
PULLUPS
SDA 4.7k R2
SCL 4.7k R3
IN3V3
MODULE
GROUND
PIN
G1*4
U$2
I3V3 PAD3
IGND PAD6
ISDA PAD1
ISCL PAD8
PAD7
VCC ATLAS
GND PROBE
SDA
SCL PROBE_G
INT
PAD4
PAD5
I3V3 C2 .1uf IGND
ISOLATOR
U$3
3V3
C5 10uf
C4 .1uf
GND
VDDP VIN PDIS
GNDP
VDDISO VISO VSEL
GNDISO
I3V3
VSEL
IGND
C11 10uf
C10 .1uf
C6 .1uf
SCL
SDA
SCL2 SDA2
SCL1 SDA1
ISCL
ISDA
ADM3260
VSEL
IGND 1.5k R6 1.5k R4 1.5k R5 I3V3
ISCL 4.7k R7
ISDA 4.7k R8
POWER
UNREG
ENABLE
IN EN GND BYP OUT
3V3
C7 6.8uf
C9 .1uf
R1 100k
C8
GND
3V3 C1 .1uf GND
EEPROM
U3
E0 E1 E2 VSS
VCC WC SCL SDA
3V3 WC SCL SDA
GND